B-TECH AV MOUNTS

AV AWARDS 2017
MANUFACTURER OF THE YEAR
WINNER

LOW PROFILE DESIGN

BT8441

UNIVERSAL FLAT SCREEN WALL MOUNT



Designed for medium and large sized screens, the BT8441 supports weights up to 80kg and features a low-profile design that mounts screens just 30mm from the wall. The universal interface accommodates mounting patterns up to 455 x 400mm and comes with adjustment screws which allow the screen to be levelled once mounted.

SPECIFICATION	
Recommended screen size	39" - 55"
Max load	80kg
Fits universal patterns	up to 455 x 400mm
Distance from wall	30mm
Colour	Black

**Please note the maximum load is reduced to 50kg when single pole mounted*



FEATURES

- Low profile design for a close to the wall installation
- Lateral adjustment of screen once mounted
- Levelling screws allow adjustment of screen height
- Compatible with B-Tech's collar and pole system for pole mounting screens
- Security locking screws help prevent unauthorised removal of screens
- Simple 'hook-on' installation
- All mounting hardware included



Low profile design mounts screen only 30mm from the wall



Lateral adjustment of screen once mounted



Levelling screws allow adjustment of screen height



Security locking screws help prevent unauthorised removal of screens

TECHNICAL DRAWINGS



TOP VIEW

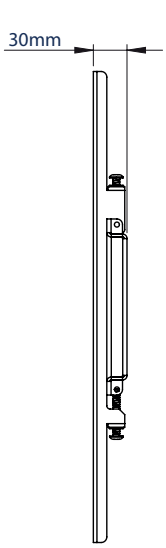

SIDE VIEW

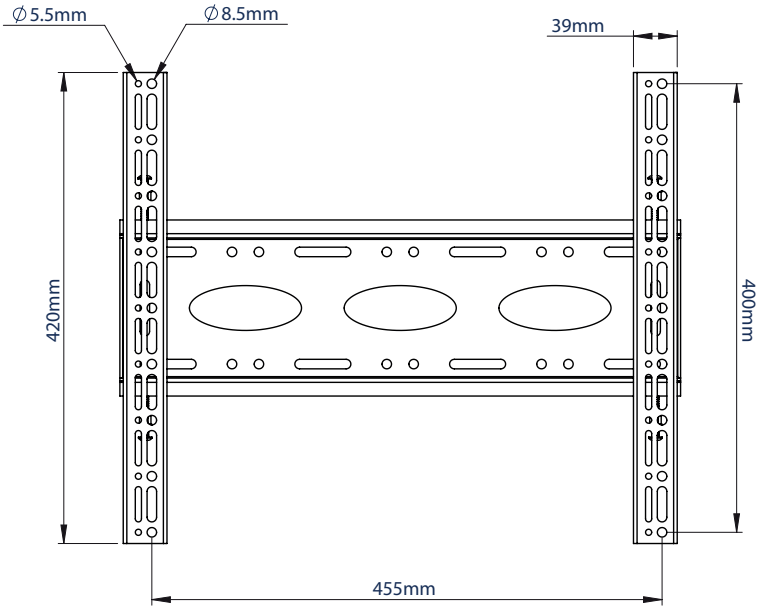

FRONT VIEW

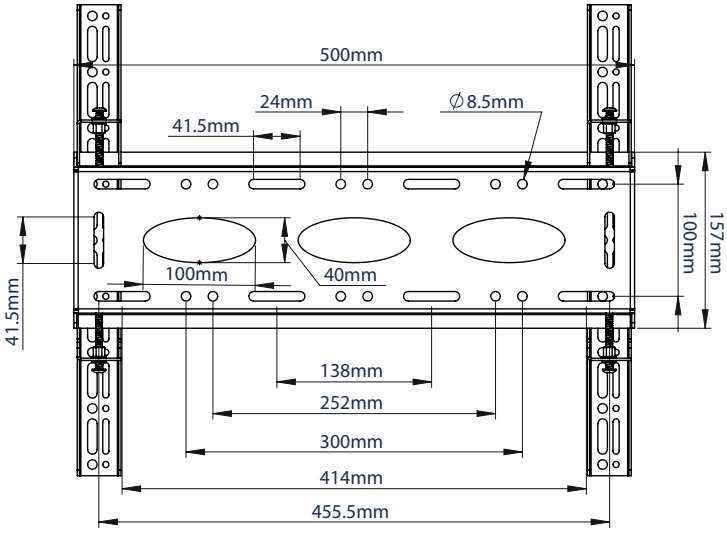

REAR VIEW

PACKING INFORMATION

COLOUR:	ORDER REF:	EAN CODE:	MASTER CARTON QTY:	INNER CARTON QTY:	MASTER CARTON WEIGHT:	MASTER CARTON CUBE:
Black	BT8441/B	5019318651205	4	0	12.8kg	0.0211cbm

RELATED PRODUCTS

BT7822



Heavy Duty Floor / Ceiling Mount for ø50mm poles

BT7850

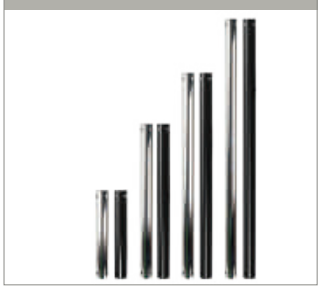

50mm Diameter Poles available as 0.25m - 3m in Black, Silver or Chrome

BT7851

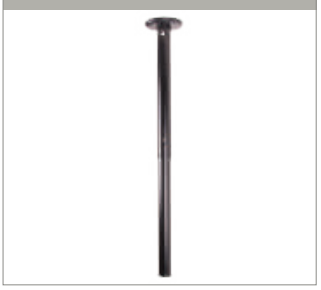

Telescopic Ceiling Mount for ø50mm poles

BT7841



Ø50mm 2-Piece Accessory Collar designed to attach a variety of different mounts and accessories onto B-Tech poles

© 2019 B-Tech International Design & Manufacturing Ltd. All rights reserved.
The information in this specification sheet reflects the current technical specifications at the time of print.
We reserve the right to change the technical or physical specifications without prior notice. The B-Tech name and the B-Tech logo are registered trademarks of B-Tech International Design & Manufacturing Ltd.
All other brands and products are trademarks of their respective owners. All B-Tech images and symbols are exclusive property of B-Tech International Design & Manufacturing Ltd.
B-Tech accepts no liability for loss or damage caused by improper installation or mounting on unstable structures. Any reproduction or retransmission or republication of any part of this specification sheet is strictly prohibited, unless prior written permission has been granted by B-Tech International Design & Manufacturing Ltd. E&OE.

SS-V1-BT8441-130319