B-TECH AV MOUNTS

B-TECH AV MOUNTS

IDEAL FOR CORNER MOUNTING

BT7515

DOUBLE ARM FLAT SCREEN WALL MOUNT WITH TILT & SWIVEL



Designed to mount medium sized flat screens, the BT7515 features a double articulated arm with easy tilt adjustment. The wall plate features 'OWLS' on wall levelling system to ensure a straight and smart installation. The BT7515 is also compatible with B-Tech's range of poles and collars, increasing the number of different ways it can be mounted, ideal for commercial applications as well as home installations. Security screws are are provided to help prevent unauthorized removal of the screen.

SPECIFICATION	
Recommended screen size	up to 47"
Max load	25kg
VESA® compatibility	up to 200 x 200
Tilt adjustment	+/-40°
Swivel at wall	180°
Distance from wall	95mm to 525mm
Colour	Black



FEATURES

- Easy tilt and swivel adjustment
- Features three swivel points: 180° at wall, 360° at central pivot and 240° at interface
- Folds flat to the wall
- Includes **CLIP**LOGIC® cable management
- Includes Security locking screws and Allen key to prevent unauthorised removal of the screen
- Simple 'hook-on' installation with all mounting hardware included



fullmotionmounts

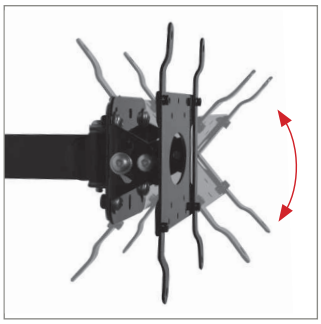

Easy tilt adjustment of +/-40°



Security locking screws provided



Space saving deasign - folds flat againts the wall

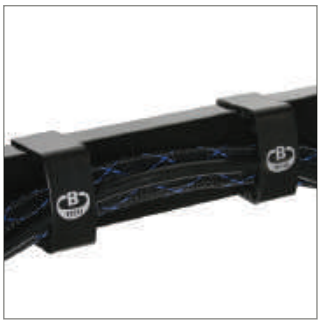

CLIPLOGIC™ cable management

TECHNICAL DRAWINGS

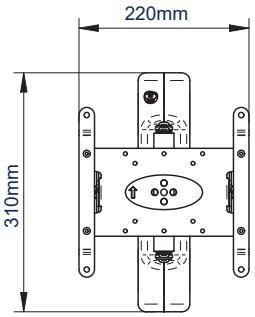

FRONT VIEW - MAXIMUM EXTENSION

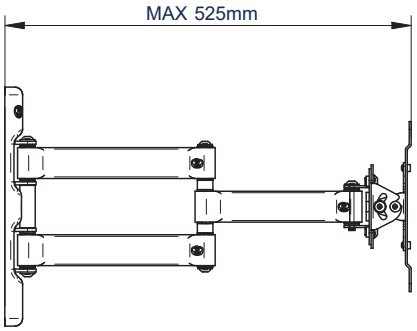

SIDE VIEW - MAXIMUM EXTENSION

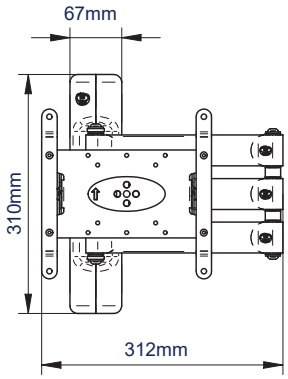

FRONT VIEW - FOLDED TO WALL

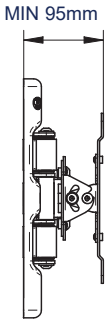

SIDE VIEW - FOLDED TO WALL

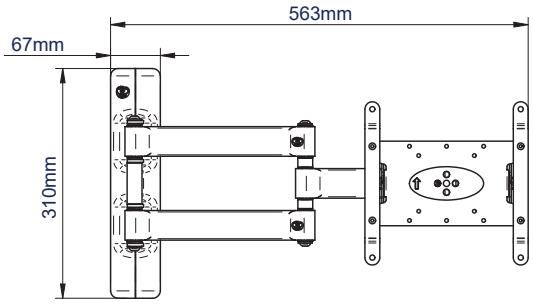

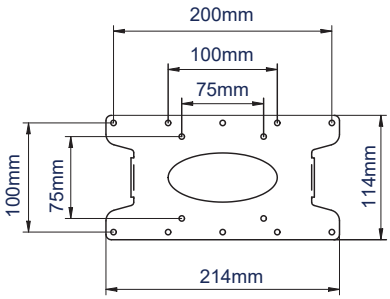

INTERFACE PLATE - FRONT VIEW

PACKING INFORMATION

COLOUR:	ORDER REF:	EAN CODE:	MASTER CARTON QTY:	INNER CARTON QTY:	MASTER CARTON WEIGHT:	MASTER CARTON CUBE:
Black	BT7515/PB	5019318750151	2	0	9.32kg	0.033cbm

RELATED PRODUCTS AND ACCESSORIES OF THE BT7515

BT7532



Fixed Flat Screen Wall Mount for screens up to 47"

BT7514



Single Arm Flat Screen Wall Mount with Tilt & Swivel for screens up to 47"

BTV514



Double Arm Flat Screen Wall Mount with Tilt & Swivel for screens up to 60"

BT7841



2 x Accesorry Collars attaches the mount to Ø50mm poles

© 2021 B-Tech International Design & Manufacturing Limited. All rights reserved.
The information in this specification sheet reflects the current technical specifications at the time of print.
We reserve the right to change the technical or physical specifications without prior notice. The B-Tech name and the B-Tech logo are registered trademarks of B-Tech International Design & Manufacturing Limited.
All other brands and products are trademarks of their respective owners. All B-Tech images and symbols are exclusive property of B-Tech International Design & Manufacturing Limited.
B-Tech accepts no liability for loss or damage caused by improper installation or mounting on unstable structures. Any reproduction or retransmission or republication of any part of this specification sheet is strictly prohibited, unless prior written permission has been granted by B-Tech International Design & Manufacturing Limited. E&OE.

SS-BT751T-V3-151021 European Trademark Number: 001713280-0008